Robotina d.o.o.
OIC Hrpelje 38
SI-6240 Kozina
Slovenia

1. Wiring

Power supply
Depending on the power of the charger, choose the appropriate cross-section of the power supply cable and the appropriate fuse. The connection terminals in the charger enable the connection of a cable up to 10mm2. If you have a charger model without a RCD switch, you must install it before the power supply cable.

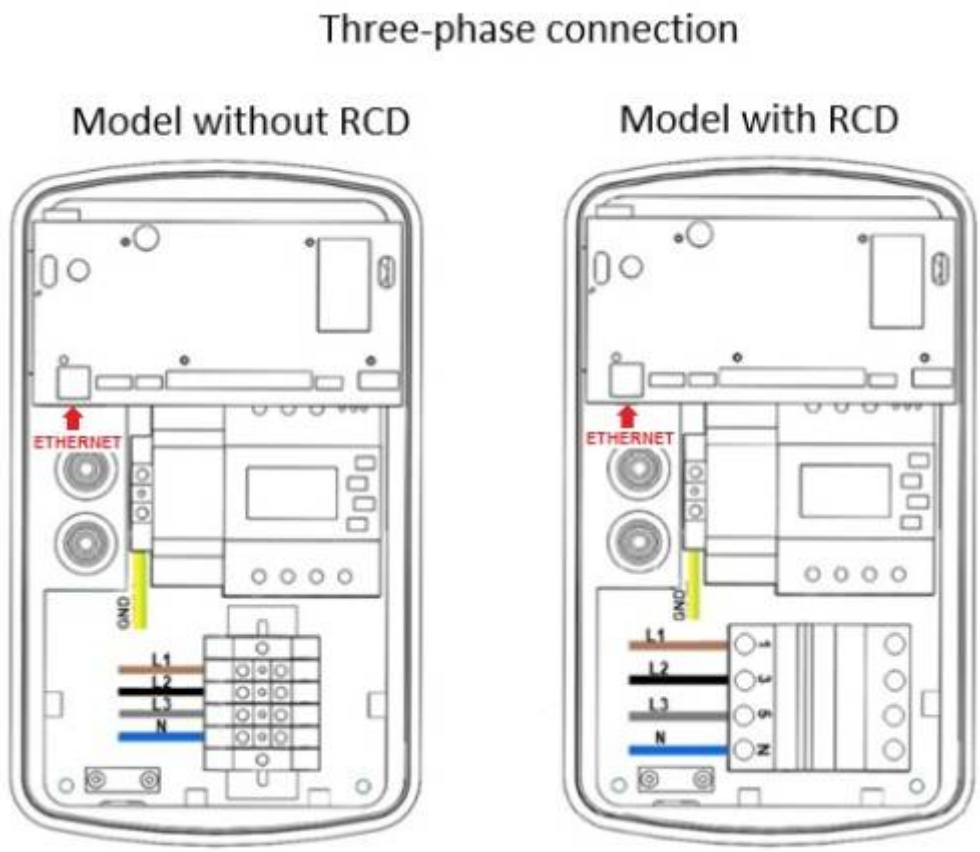

Power supply

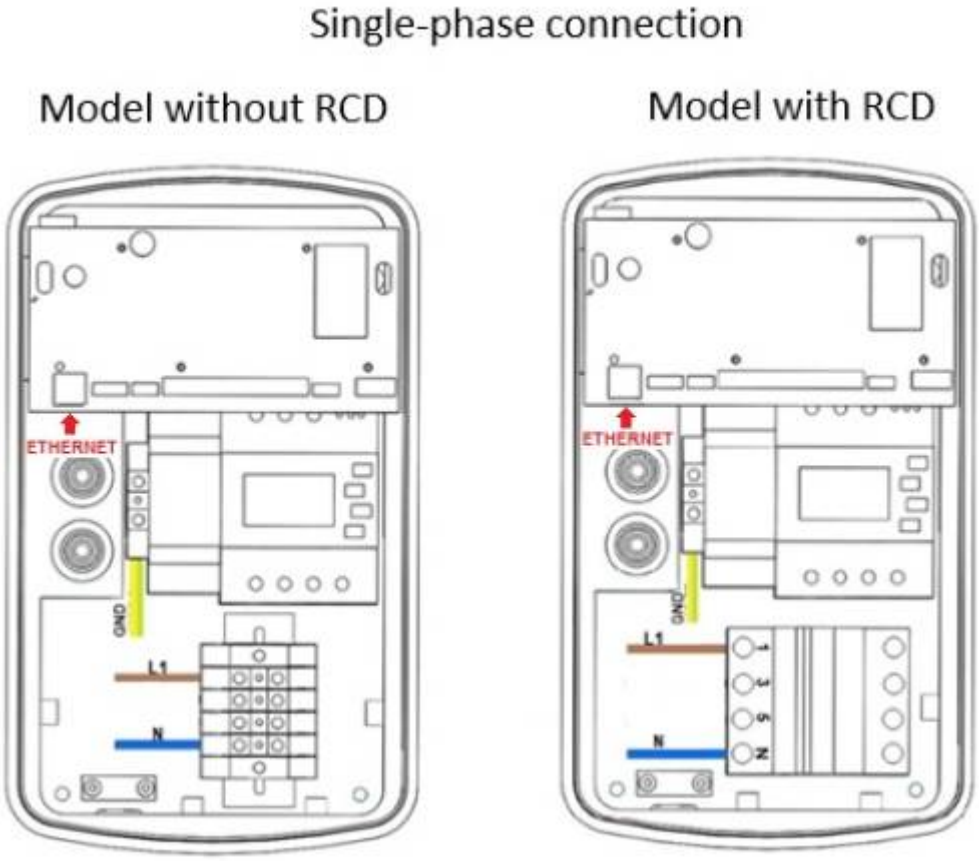

Network

Default connection to the LAN network:

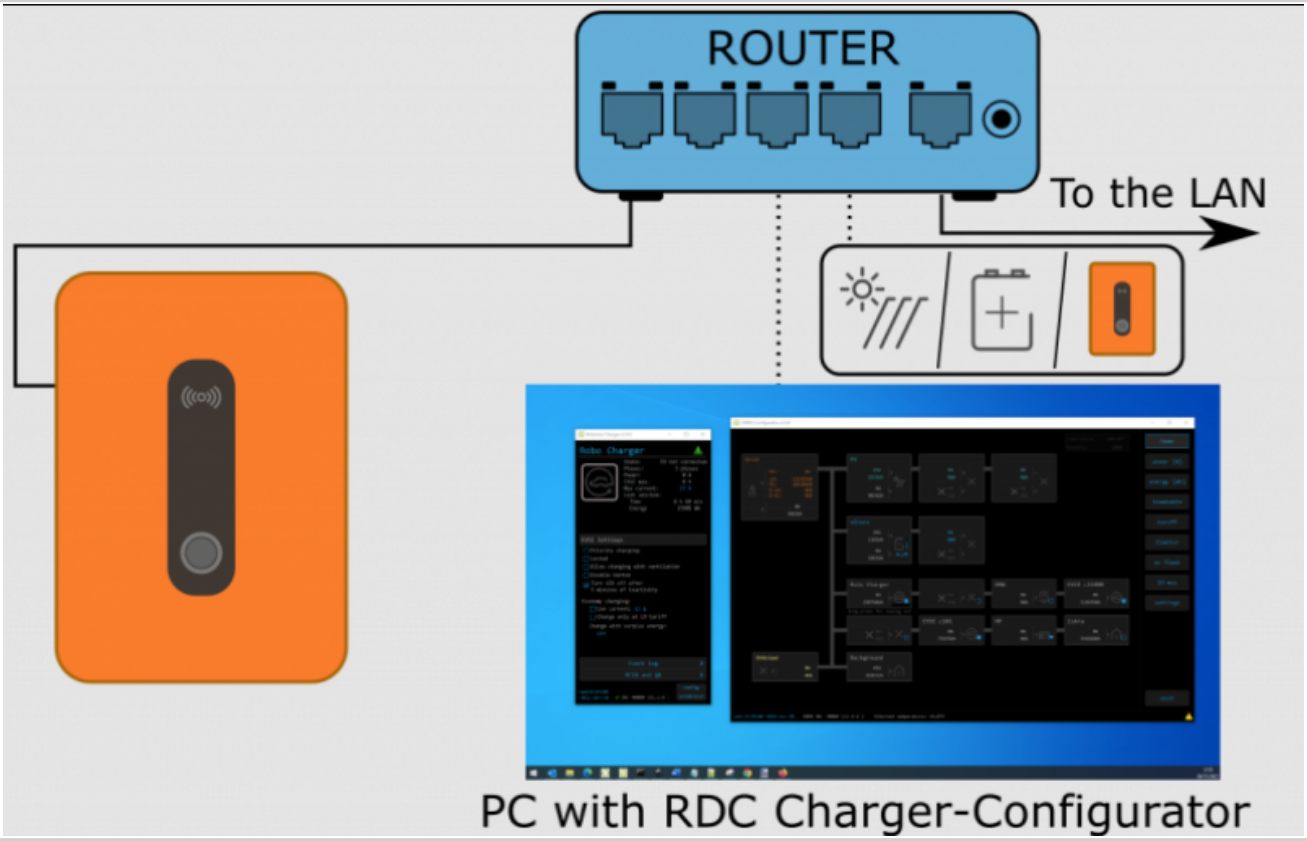

Default connection of external IOT-L2-2 linker to the LAN network:

NOTE: IOT-L2-2 linker can be installed as external unit or is integrated into the RDC Charger.

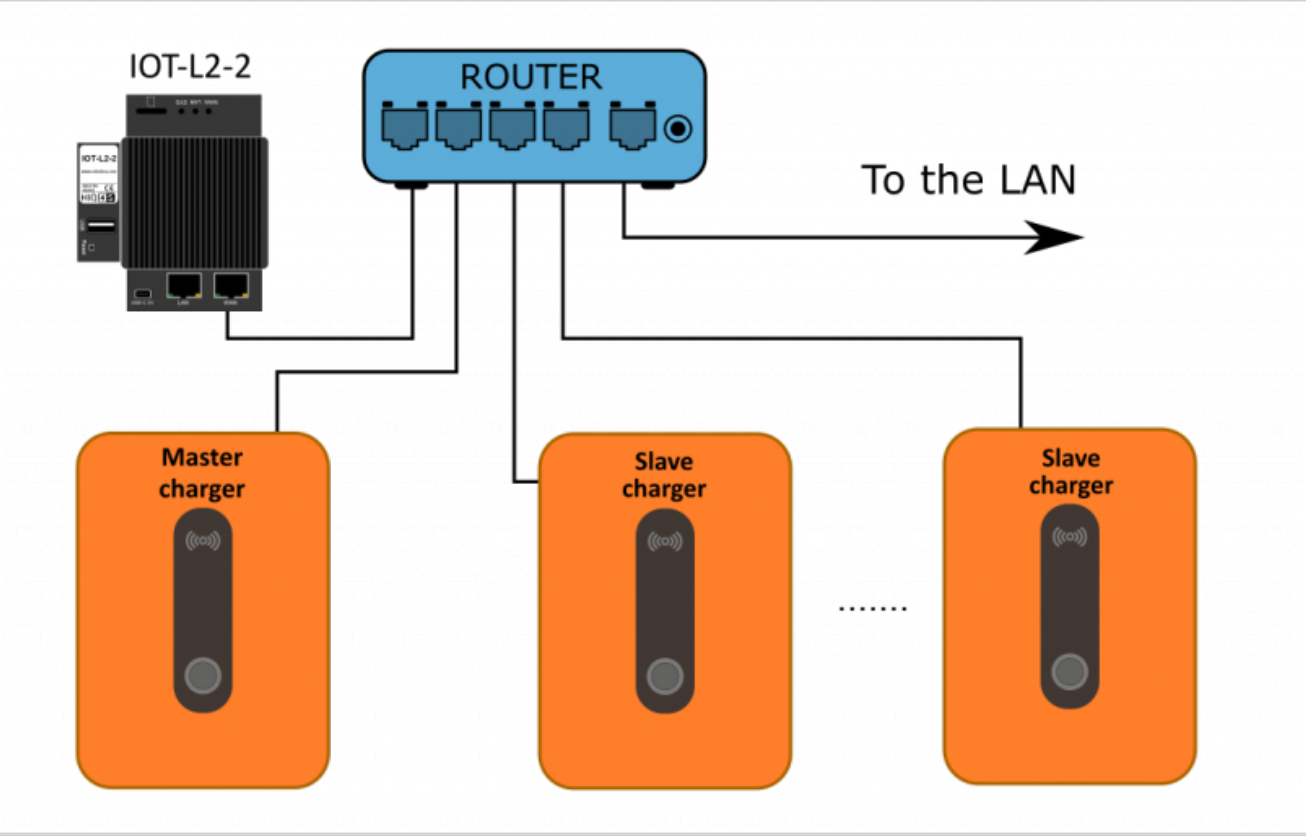

Default connection via LTE 4G modem:

NOTE: All connected devices will have internet access via LTE modem which can result in high costs on your LTE account.

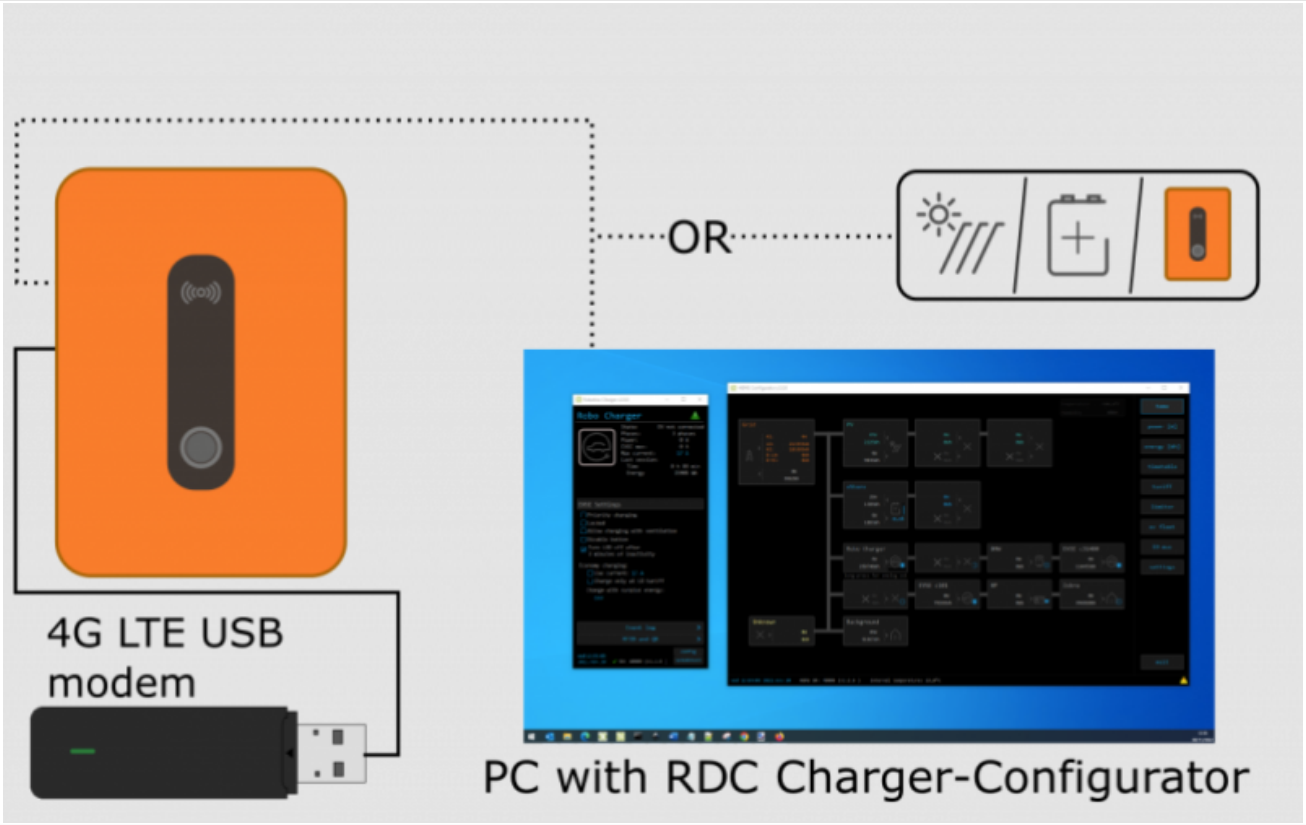

Optional LTE 4G modem connection:

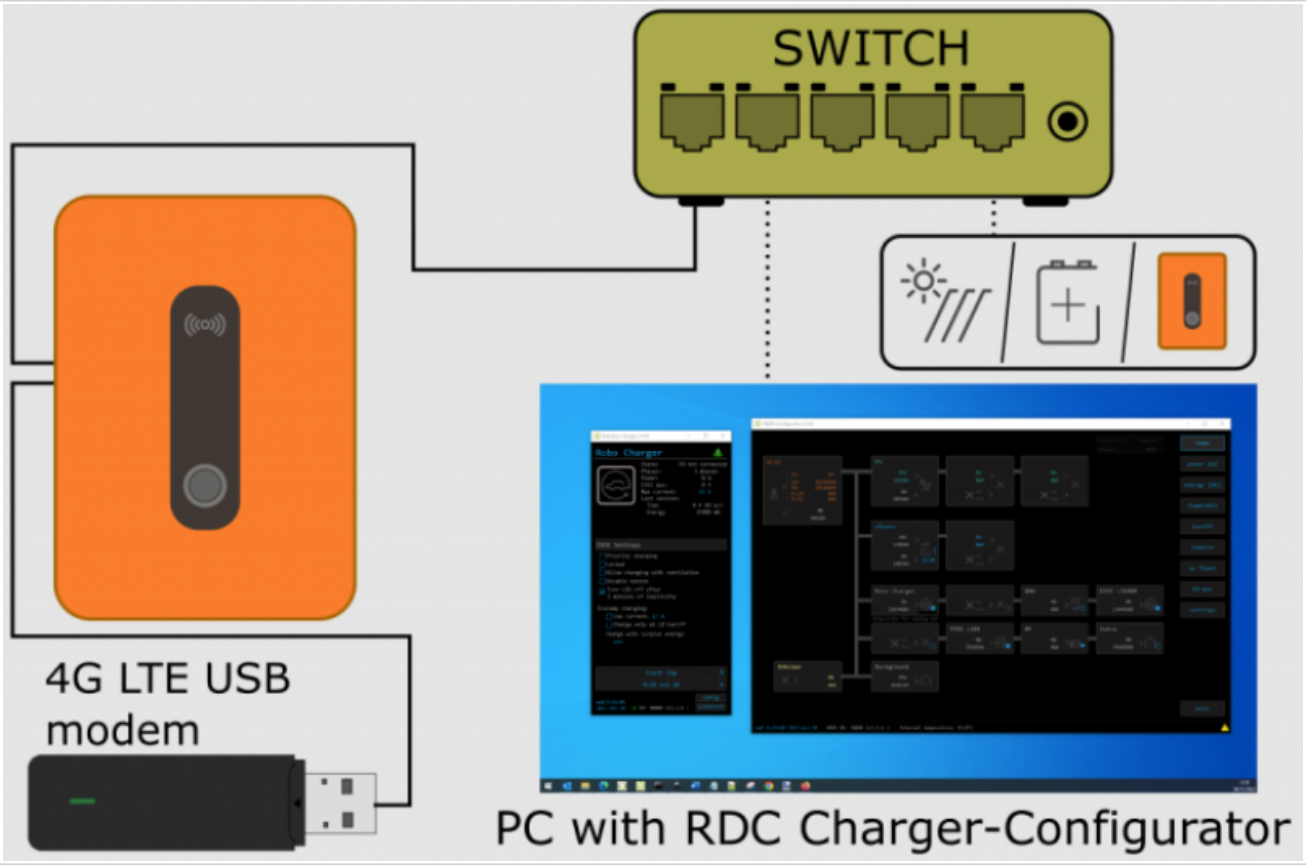

EV fleet connection

Control up to 8 RDC Chargers (EV fleet). Only one charger is master, others are slave. All chargers in fleet must be wired with ethernet cable to the same router.

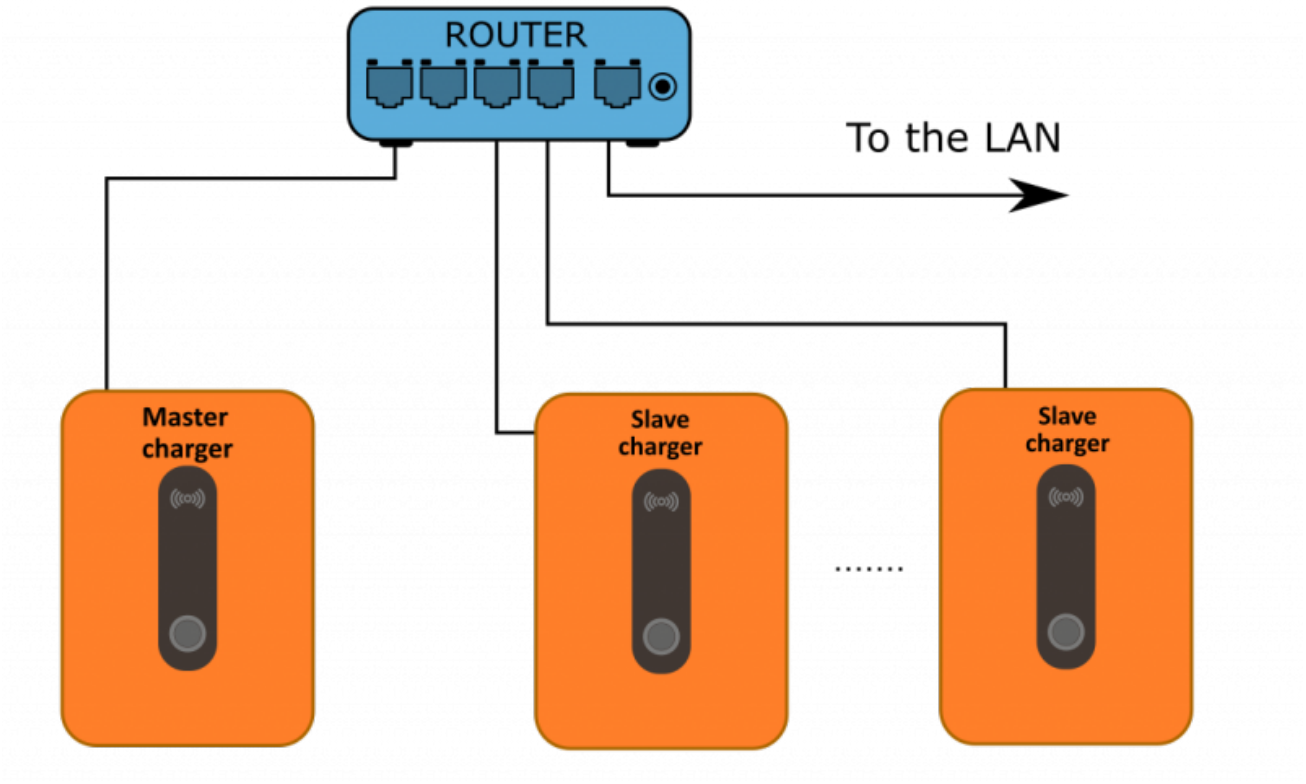

1.1. Wireless Power Sensors wiring

Wireless power sensors

Single phase power-sensor with current transformer PM1-E-D-CT

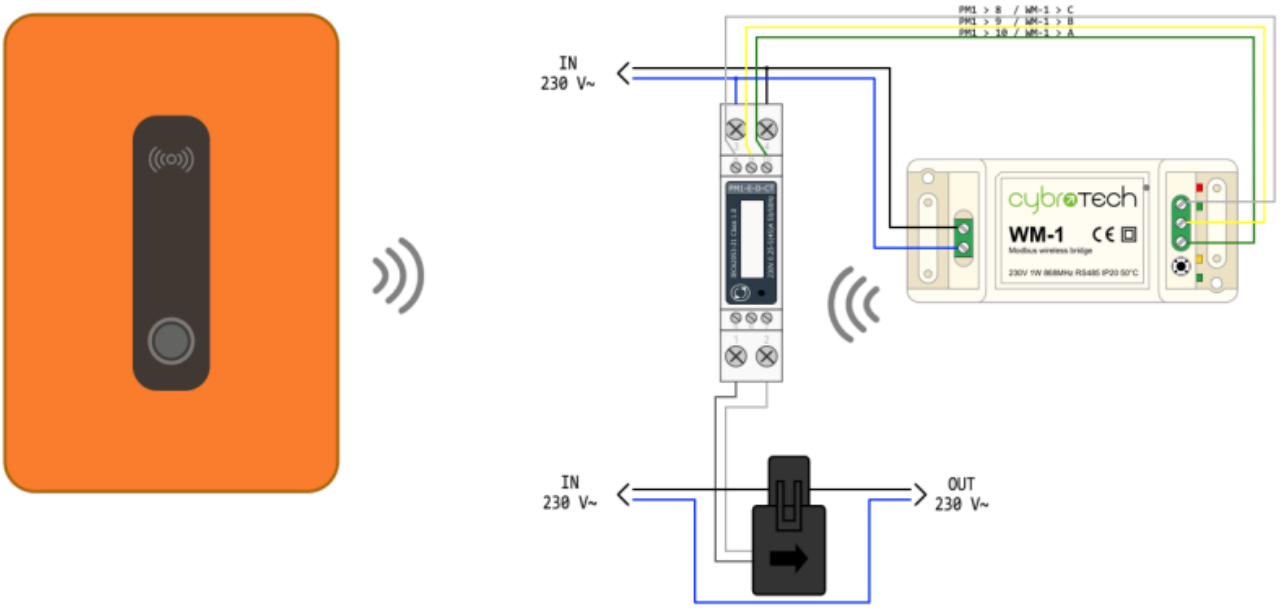

3-phase power-sensor PM3-E-D

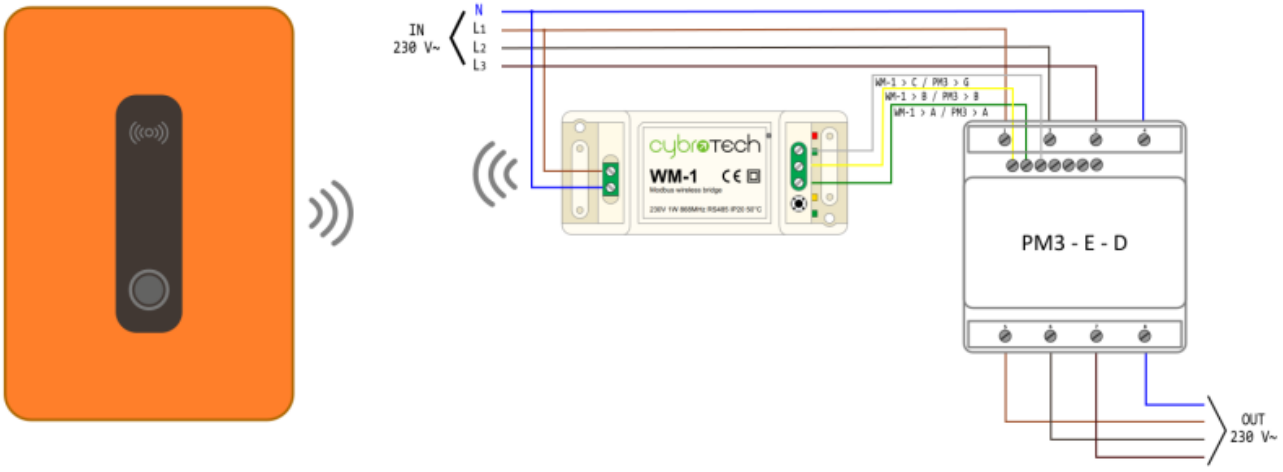

3-phase power-sensor with CT PM3-E-D-CT

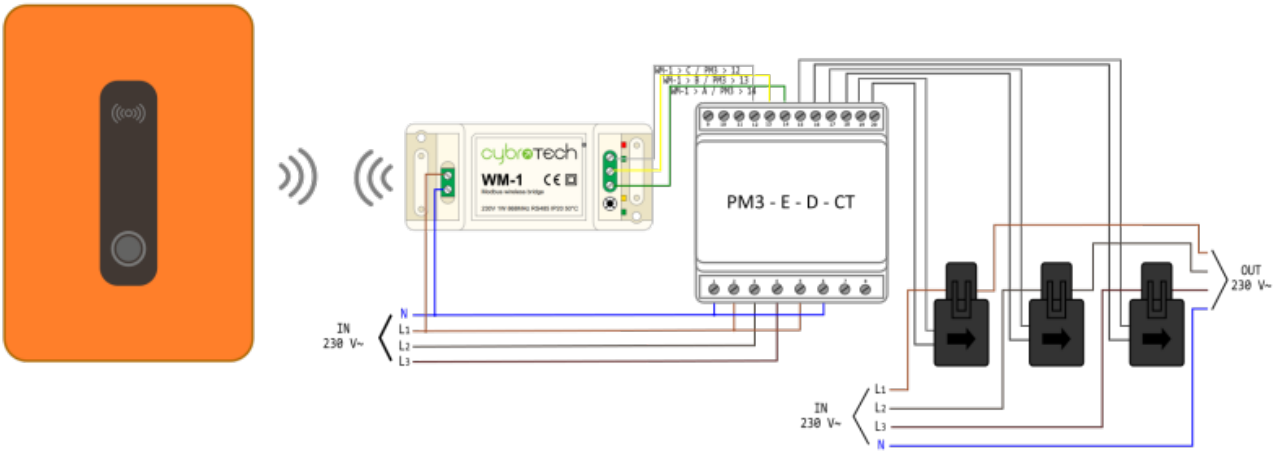

Charger and wireless power sensors.
One or more WM-1 modules can be used. One or more power sensors can be connected to one WM-1.

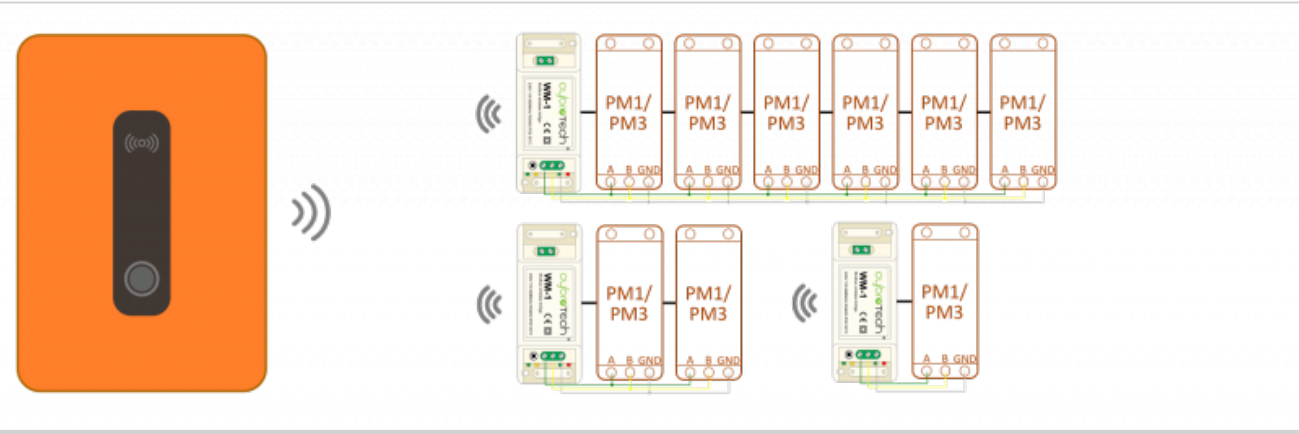

Dynamic load management

Charger and grid power sensor.
NOTE Power sensor should be mounted in the building's electrical cabinet to measure input power & current

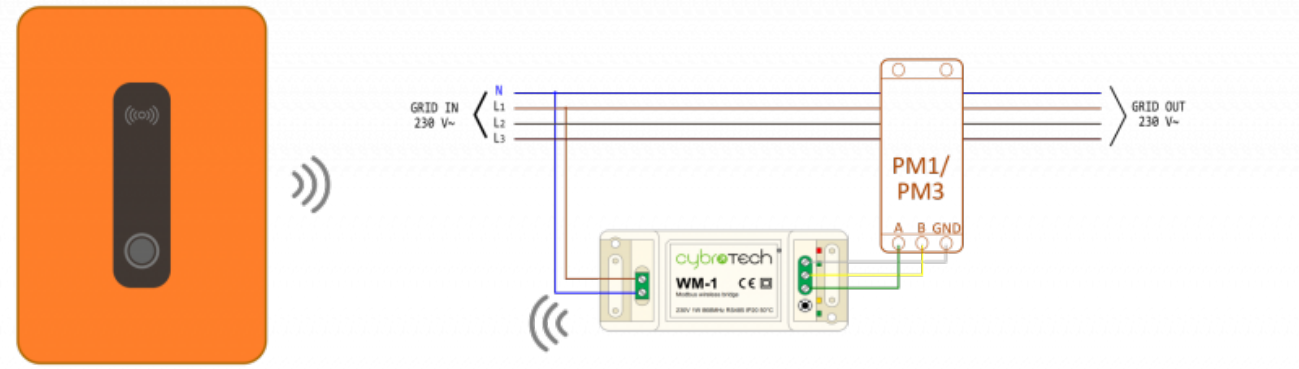

1.2. Wireless relay wiring

Wireless relay

Charger and wireless relay.
Up to 8 WR-1 modules can be used.



Power sensors orientation

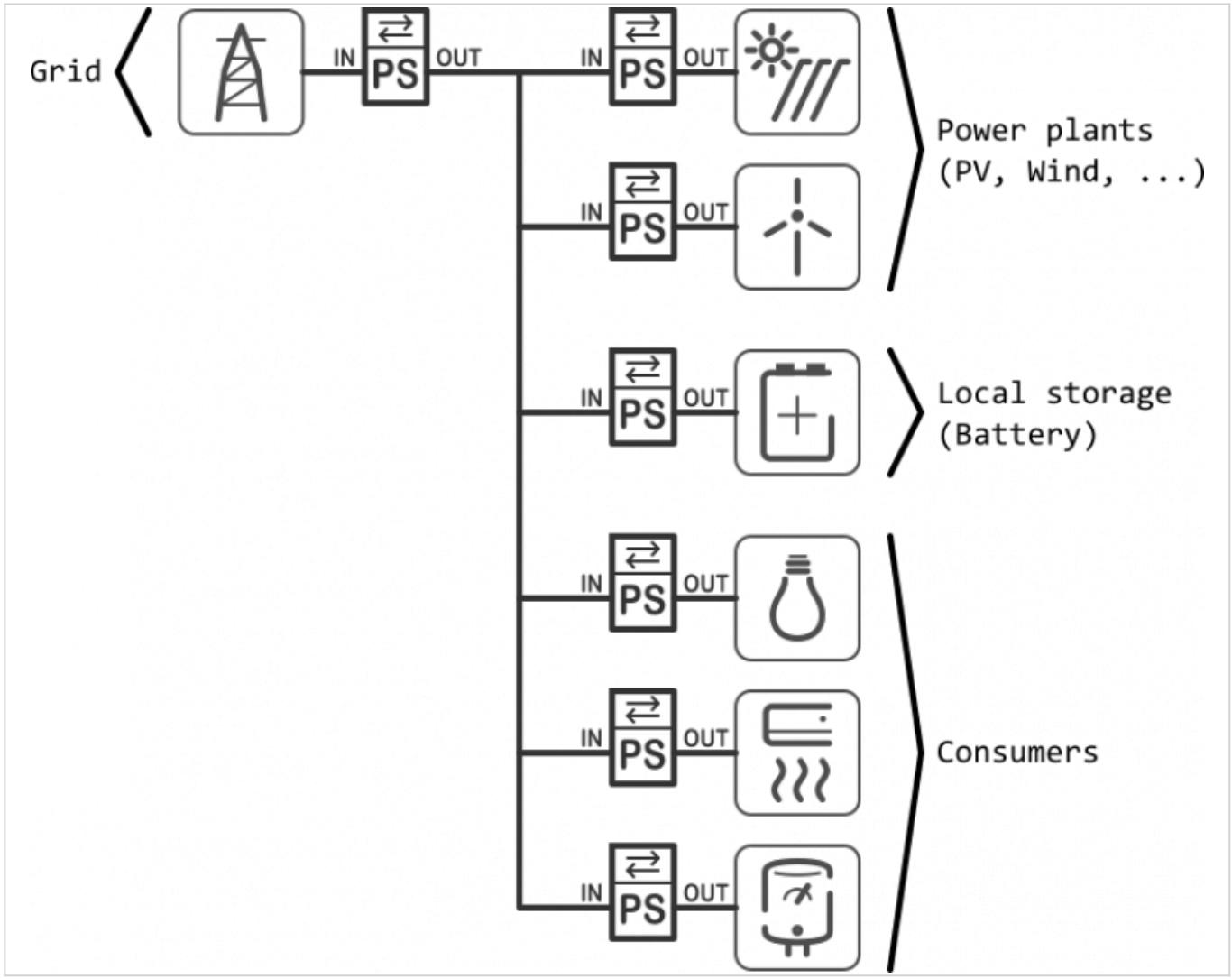
Grid
IN
PS
OUT
Power plants
(PV, Wind, ...)
Local storage
(Battery)
Consumers