Robotina d.o.o.
OIC Hrpelje 38
SI-6240 Kozina
Slovenia

1. Three phase power sensor, CT

3-phase power-sensor, current transformer



Model number:	**PM3-E-D-CT**
Connect to:	RDC Charger
	RS485 power sensor bus A - B
Mounting:	DIN rail, 1M, 18 mm
Dimensions:	65 × 72 × 94,5 mm
Used for measuring power and energy of	
✔	single/three-phase energy sources
✔	single/three-phase energy consumers

1.1. Applications

- Digital multi-function power sensor for single/three phase networks

1.2. Features

- DIN rail mounting with 3x current transformers (3-ph current transformer)
- Line voltage and THD% (total harmonic distortion) of all phases

- Line Frequency
- Currents, Current demands and current THD% of all phases
- Power, maximum power demand and power factor
- Active energy imported and exported
- Reactive energy imported and exported

1.3. General description

The unit measures and displays the characteristics of three phase four wires(3p4w) supplies, including voltage, frequency, current, power, active and reactive energy, imported or exported. Energy is measured in terms of kWh, kVArh. Maximum demand current can be measured over preset periods of up to 60minutes. In order to measure energy, the unit requires voltage and current inputs in addition to the supply required to power the product. The requisite current input(s) are obtained via current transformers (CT). This power sensor can be configured to work with a wide range of CTs with 0.33V output, giving the unit a wide range of operation. Built-in interfaces provide pulse and RS485 Modbus RTU outputs. Configuration is password protected. This power sensor can be powered from a separate auxiliary (AC or DC) supply. Alternatively, it can be powered from the monitored supply, where appropriate.

1.4. Technical specifications

Technical Data	
Operating Humidity	≤ 75%
Storage Humidity	≤ 95%
Operating Temperature	-25°C - +50°C
Storage Temperature	-40°C - +70°C
Mounting	DIN rail (DIN 43880)
Sealing	IP51 Indoor
Auxiliary supply voltage	Nominal ± 1%
Auxiliary supply frequency	Nominal ± 1%
Frequency	50Hz or 60Hz(±2%)
Power Consumption	≤ 10W
Accuracy	
Voltage, Current	0.5%
Frequency	0.2% of Mid-Frequency
Power Factor	1% of Unity (0.01)
Active Power, Apparent Power	± 1% of Range Maximum
Reactive Power	± 1% of Range Maximum
Reactive Energy (Varh)	± 1% of Range Maximum
Active Energy (Wh)	Class 1 IEC 62053-21
Current transformer	
Frequency	50-60 Hz
Rated current	50 A
Accuracy	from 20% to 120% of rated current
Phase angle	less than 2 degrees at 50% of rated current

Insulation voltage	600 VAC
Maximum primary voltage	5000 VAC (insulated conductor)
Dielectric strength	2.5 kV/1mA/1min
Operating temperature	-15 to 60°C
Operating humidity	< 85 %
Case material	PC/UL94-V0
Bobin	PBT
Core	Permalloy
Internal structure	Epoxy
Leads	UL 1015, Twisted pair, 22 AWG
Modbus	
Bus Type	RS485 (Semi-Duplex)
Protocol	Modbus RTU
Baud Rate	1200/2400/4800/9600bps
Address Range	1-247
Max. Bus Loading	64pcs
Communication Distance	1000 Meters
Parity	EVEN/ODD/NONE
Data Bit	8
Stop Bit	1

1.5. Dimensions

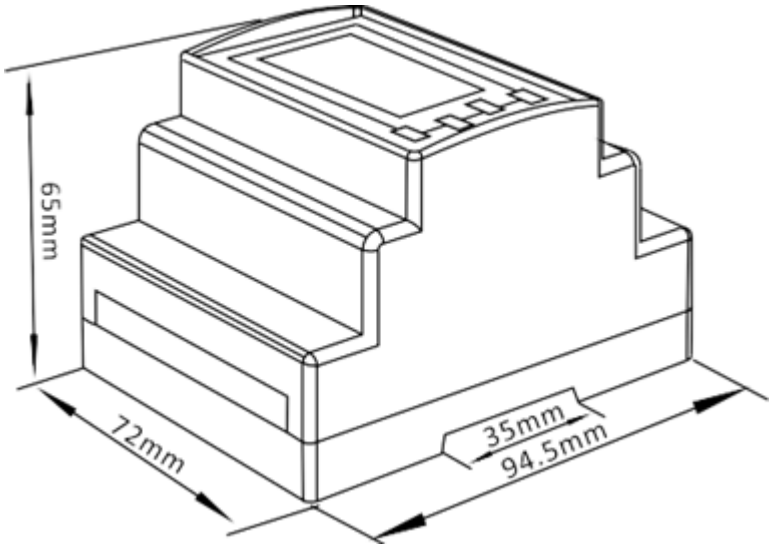

1.6. Terminals

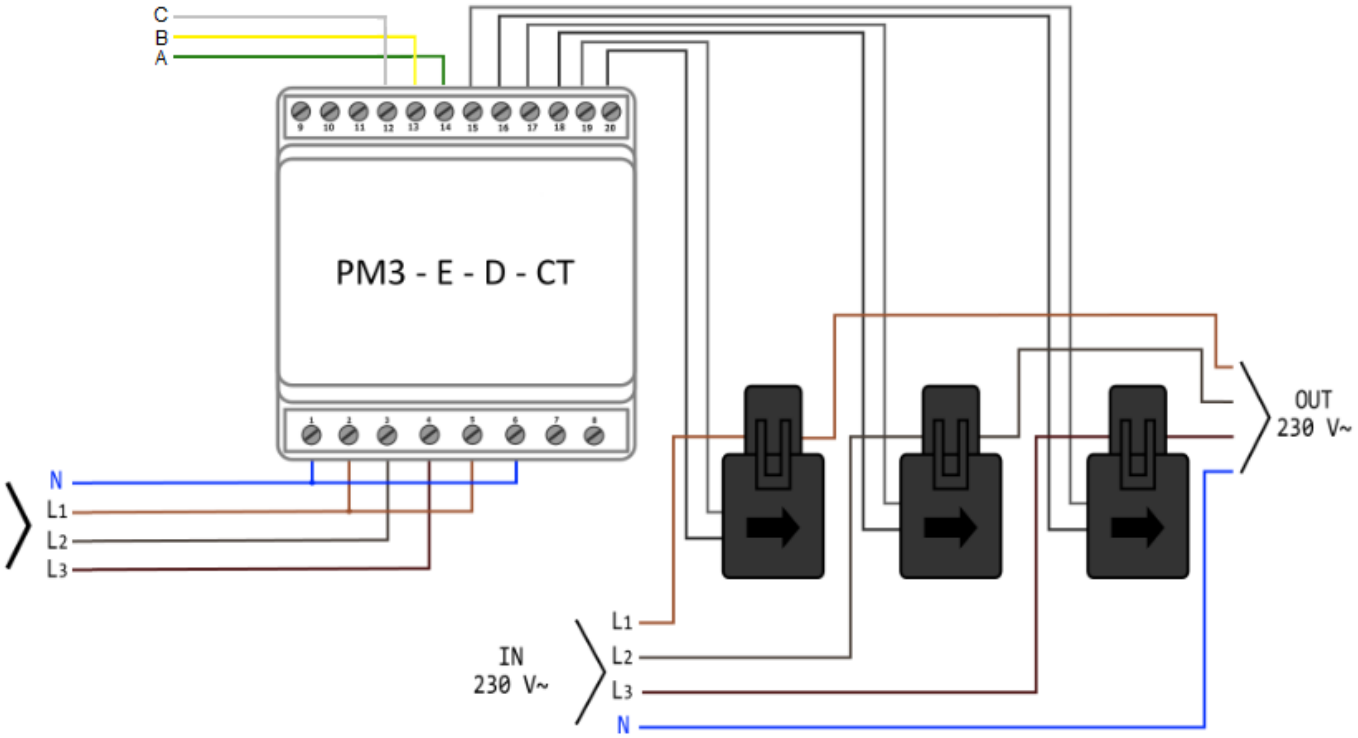

1.7. Download

hiq_pm3-e-d-ct_user_manual_v1.pdf
hiq_pm3-e-d-ct_protocol_v1.6.pdf